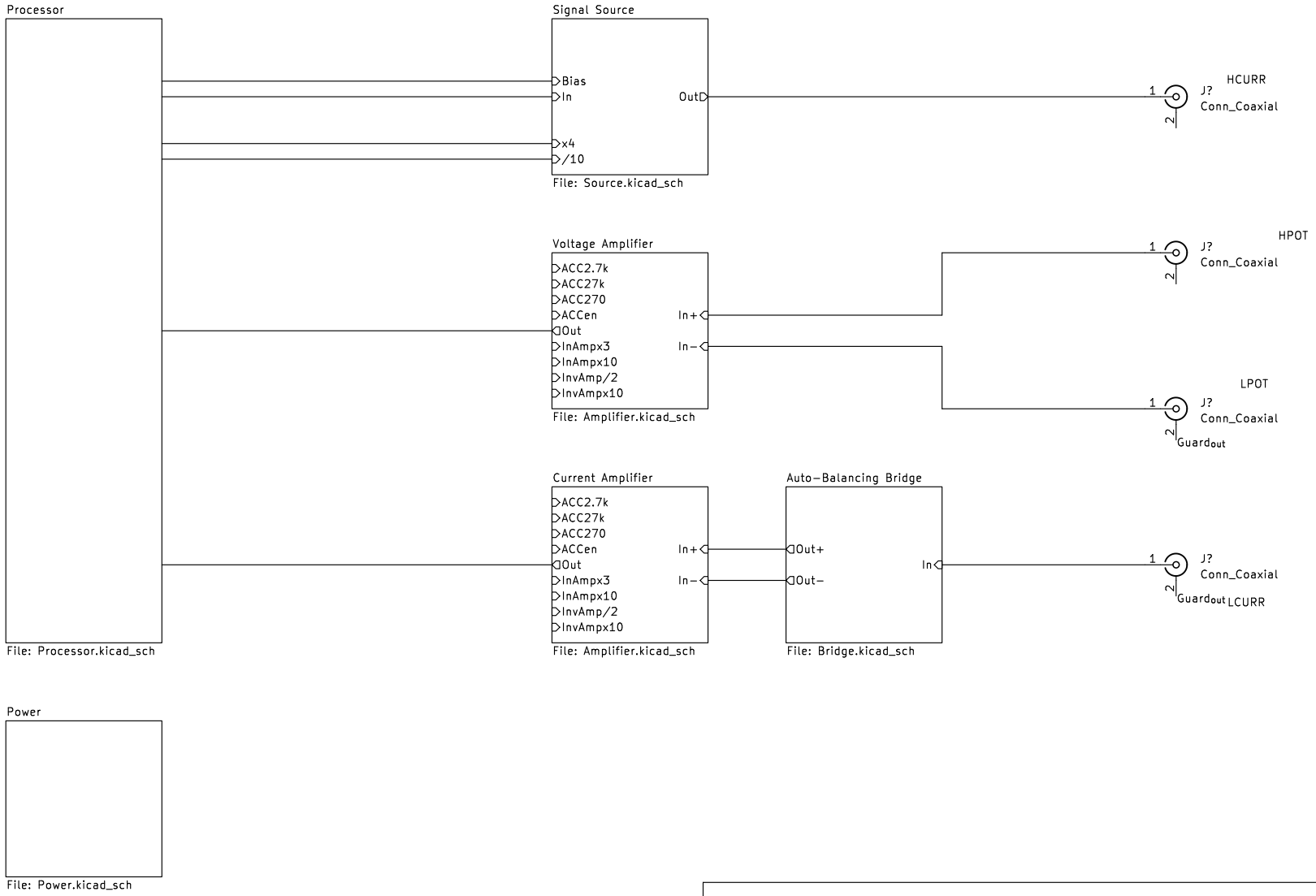

Work in Progress

Harry and Yuki – EEE3 Instrumentation

Sheet: /

File: Main Board.kicad_sch

Title:

Size: A4	Date: 2026−01−15	**Rev: Draft**
KiCad E.D.A. 9.0.7		Id: 1/8

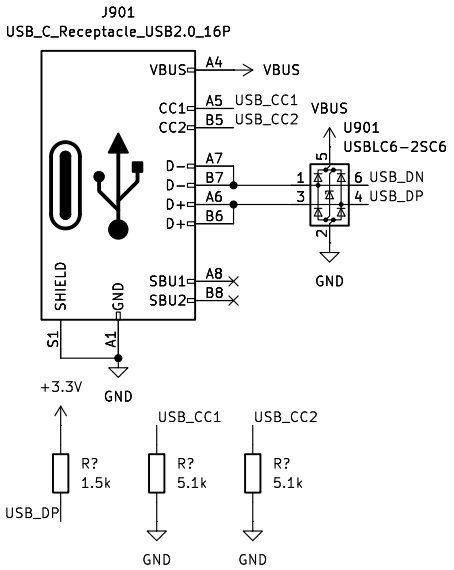

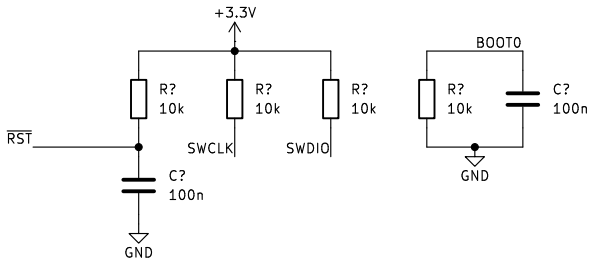

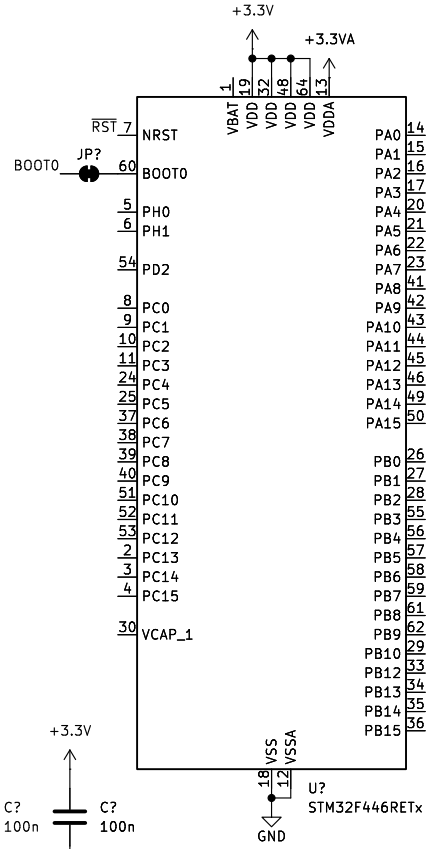

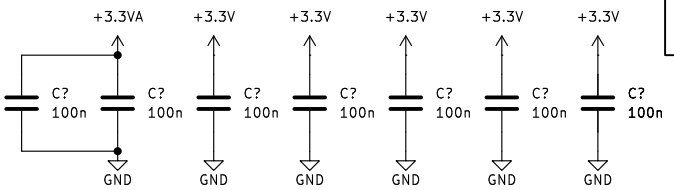

Work in Progress

Harry and Yuki – EEE3 Instrumentation

Sheet: /Processor/

File: Processor.kicad_sch

Title:

Size: A4	Date: 2026-01-15	**Rev: Draft**
KiCad E.D.A. 9.0.7		Id: 2/8

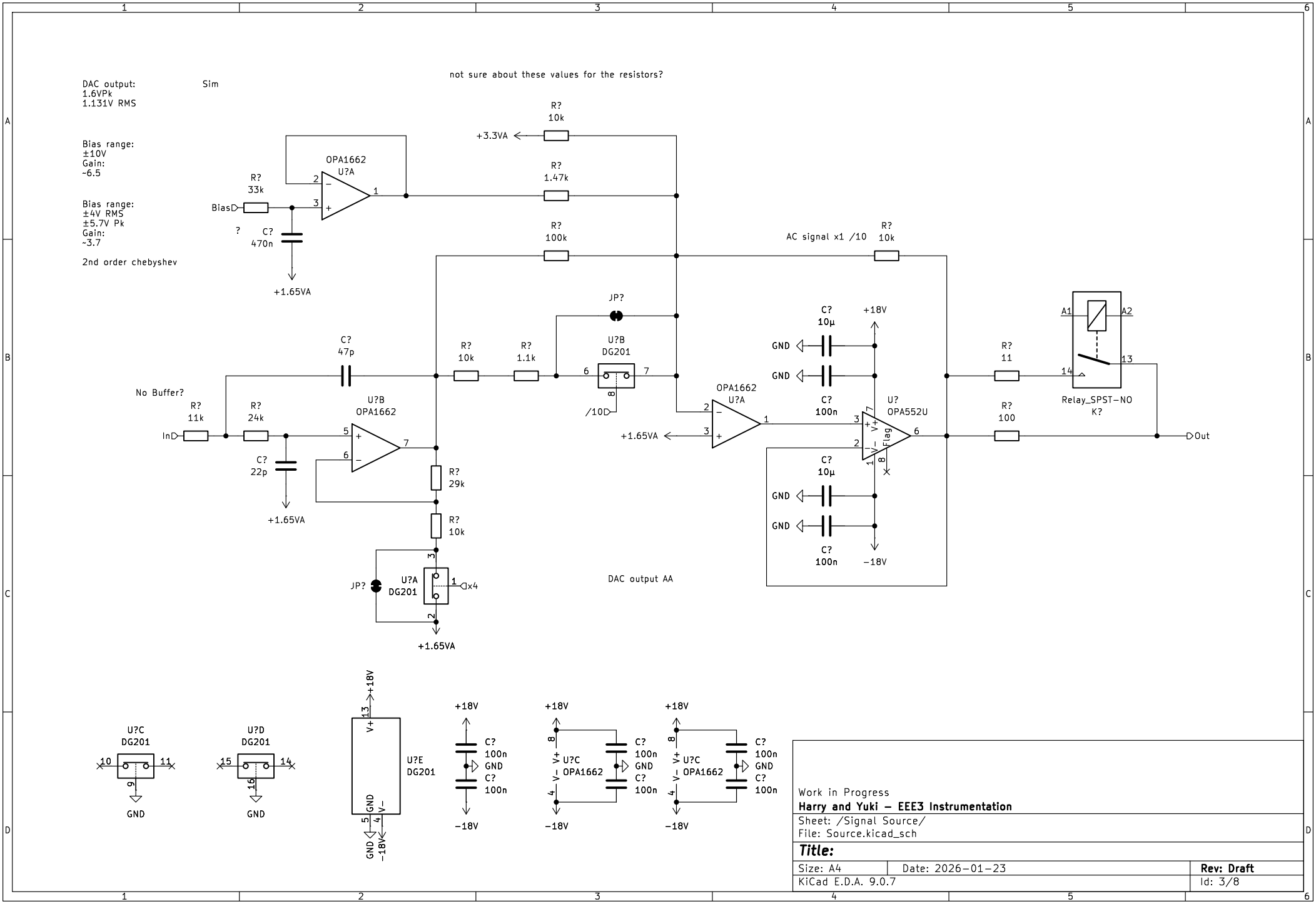

Work in Progress

Harry and Yuki – EEE3 Instrumentation

Sheet: /Signal Source/

File: Source.kicad_sch

Title:

Size: A4	Date: 2026-01-23	**Rev: Draft**
KiCad E.D.A. 9.0.7		Id: 3/8

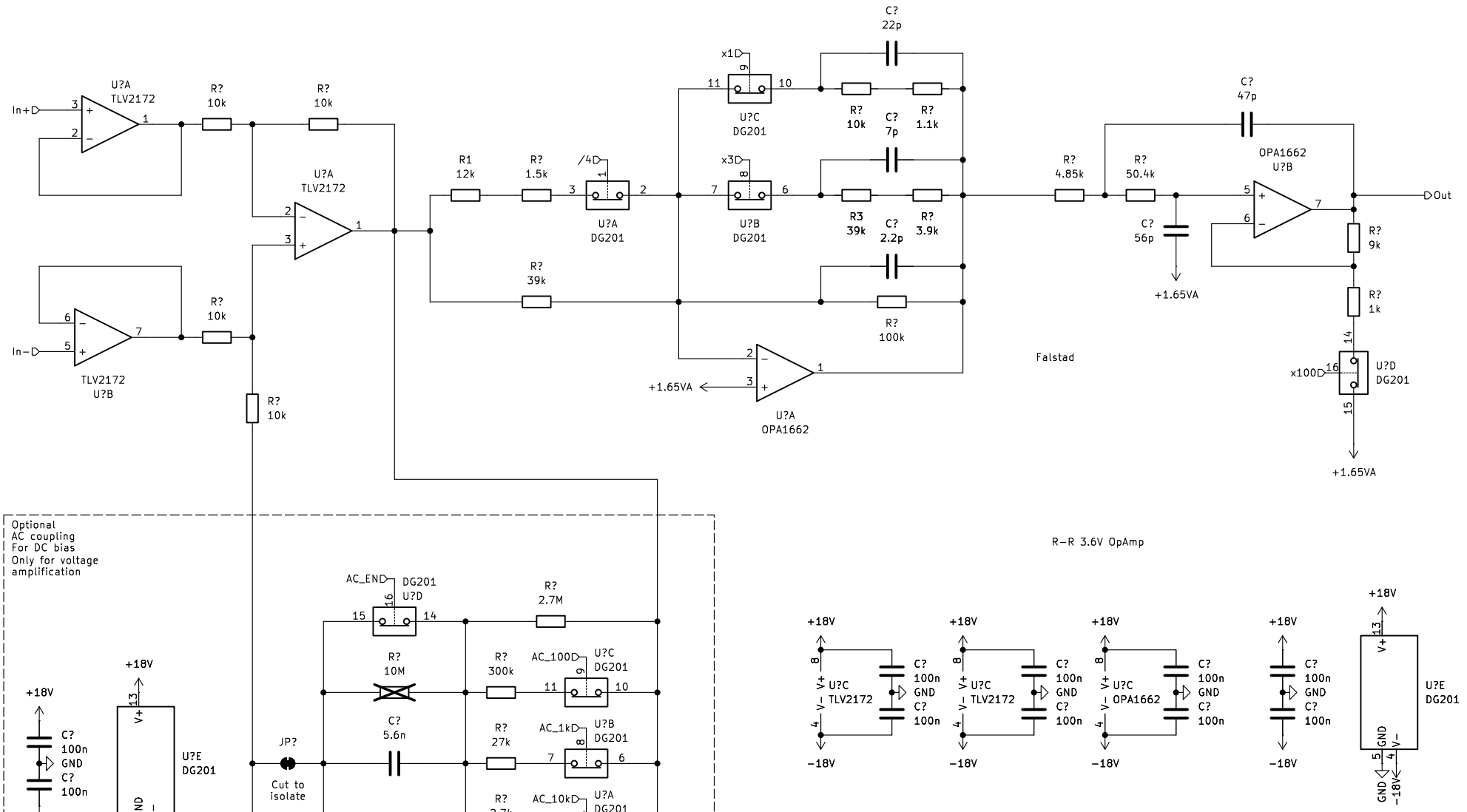

Work in Progress

Harry and Yuki – EEE3 Instrumentation

Sheet: /Voltage Amplifier/

File: Amplifier.kicad_sch

Title: Instrumentation Amplifier

Size: A4	Date: 2026-01-15	**Rev: Draft**
KiCad E.D.A. 9.0.7		Id: 4/8

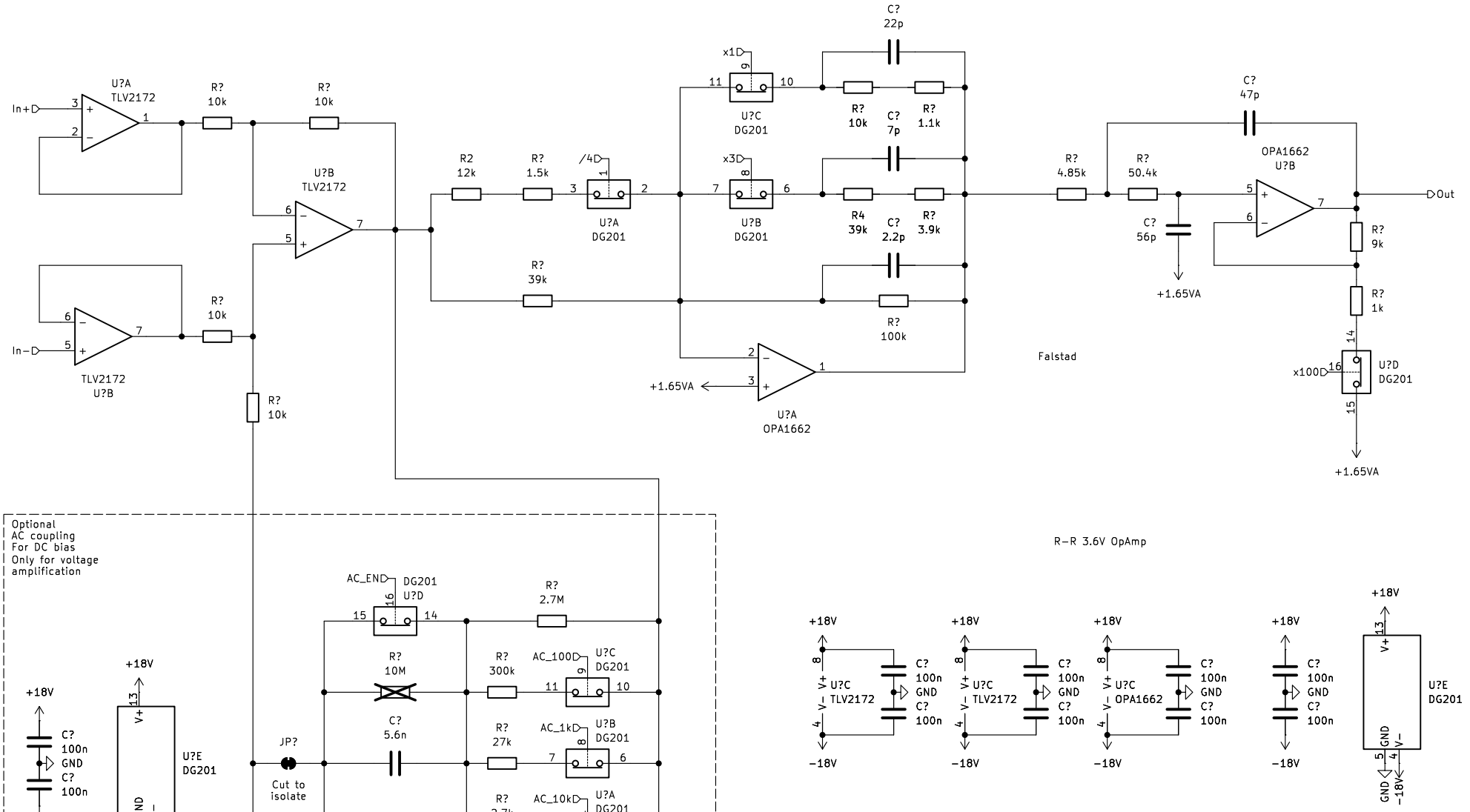

Work in Progress

Harry and Yuki – EEE3 Instrumentation

Sheet: /Current Amplifier/

File: Amplifier.kicad_sch

Title: Instrumentation Amplifier

Size: A4	Date: 2026-01-15	**Rev: Draft**
KiCad E.D.A. 9.0.7		Id: 6/8

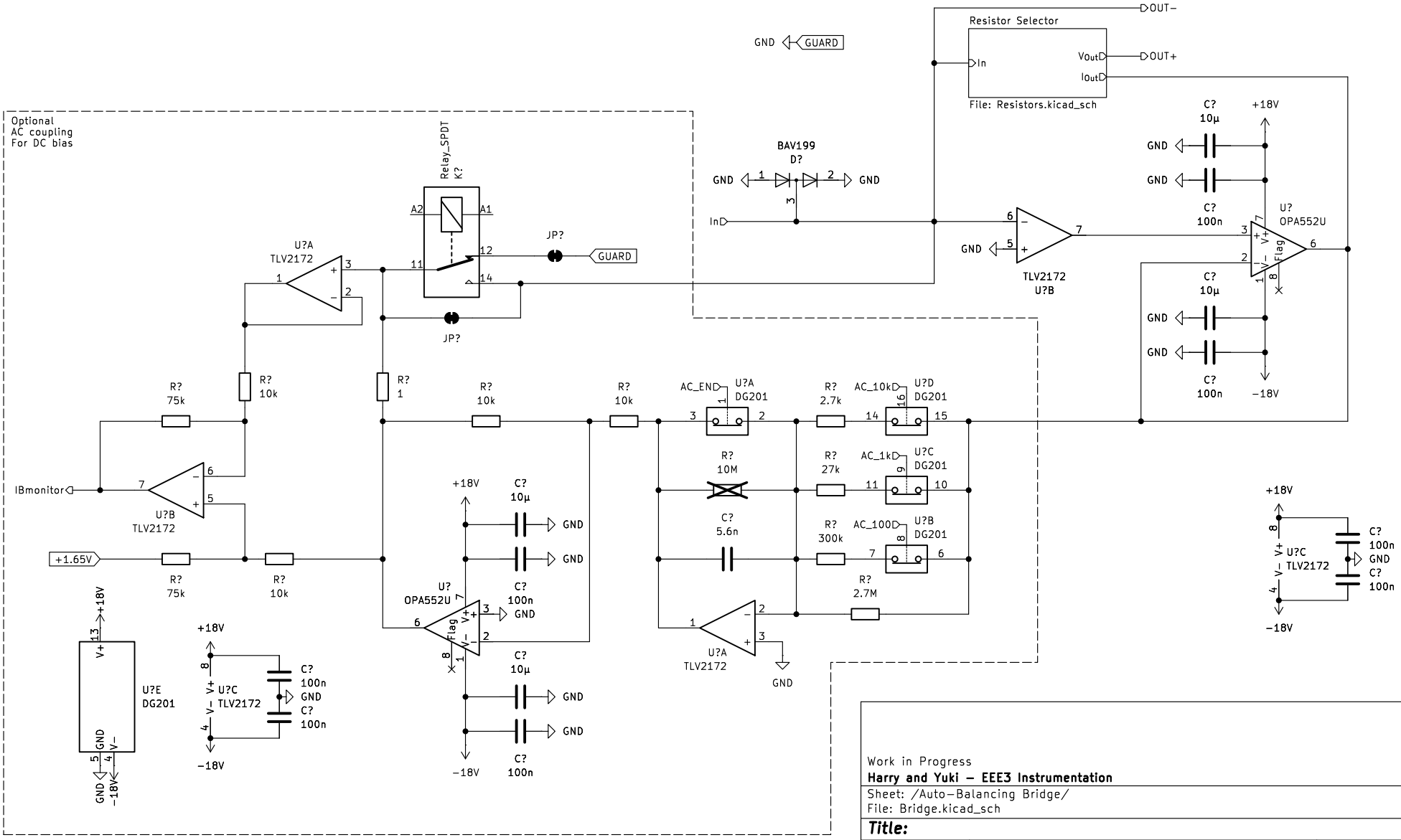

Work in Progress

Harry and Yuki – EEE3 Instrumentation

Sheet: /Auto-Balancing Bridge/

File: Bridge.kicad_sch

Title:

Size: A4	Date: 2026-01-15	**Rev: Draft**
KiCad E.D.A. 9.0.7		Id: 7/8

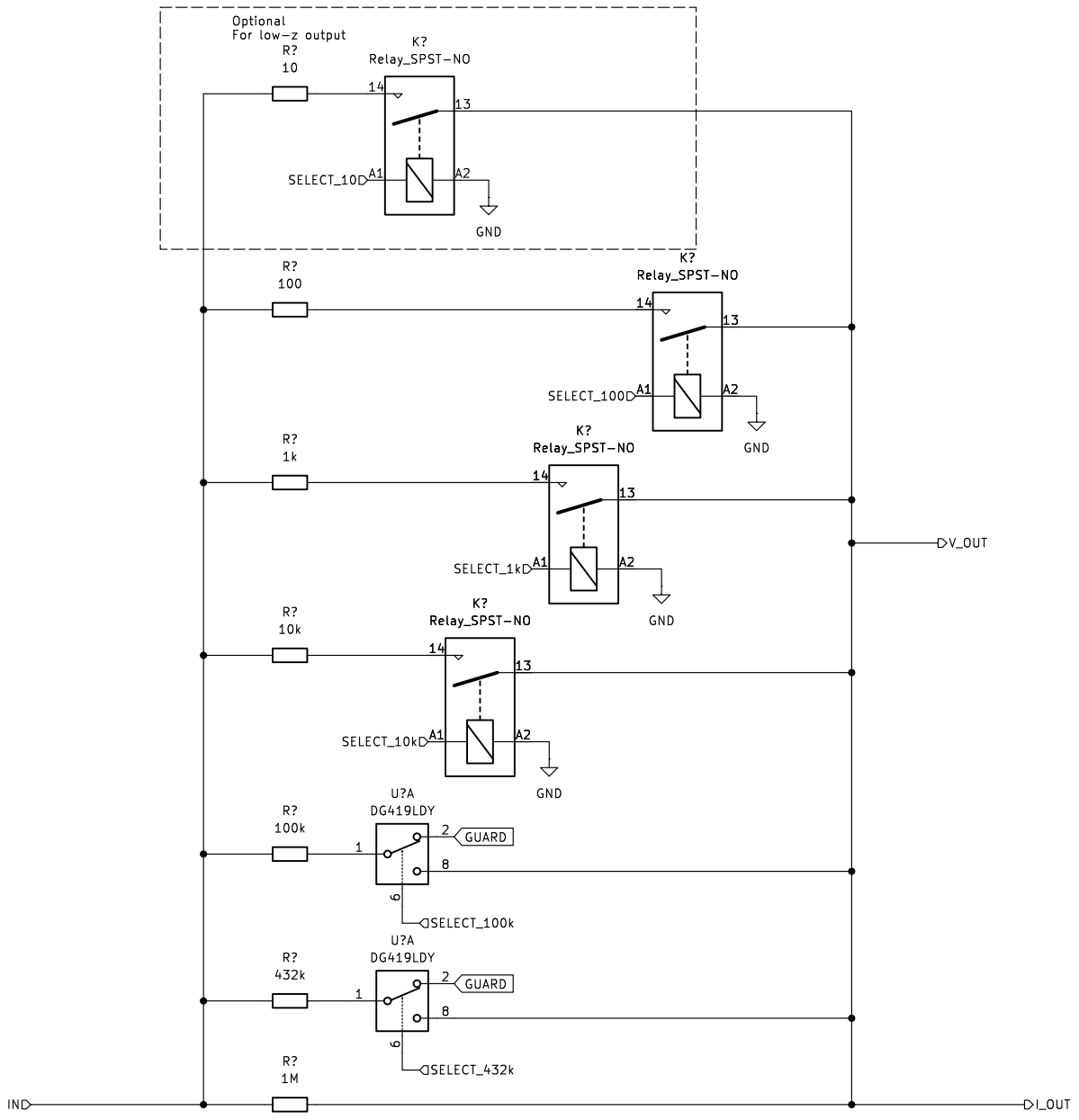

Harry and Yuki – EEE3 Instrumentation

Sheet: /Auto-Balancing Bridge/Resistor Selector/
File: Resistors.kicad_sch

Title:

Size: A4	Date:	**Rev:**
KiCad E.D.A. 9.0.7		Id: 8/8

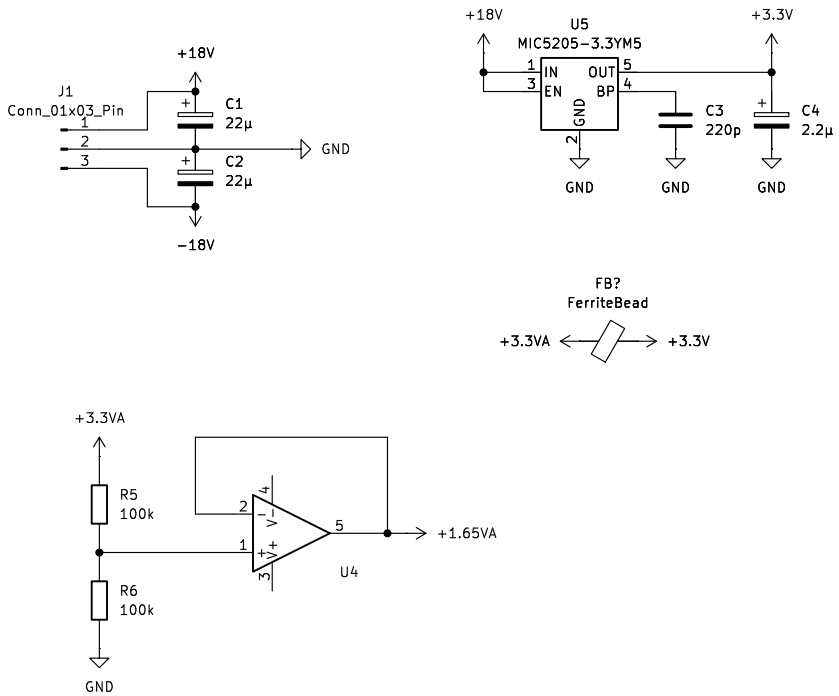

Work in Progress

Harry and Yuki – EEE3 Instrumentation

Sheet: /Power/

File: Power.kicad_sch

Title:

Size: A4	Date: 2026−01−15	**Rev: Draft**
KiCad E.D.A. 9.0.7		Id: 13/8